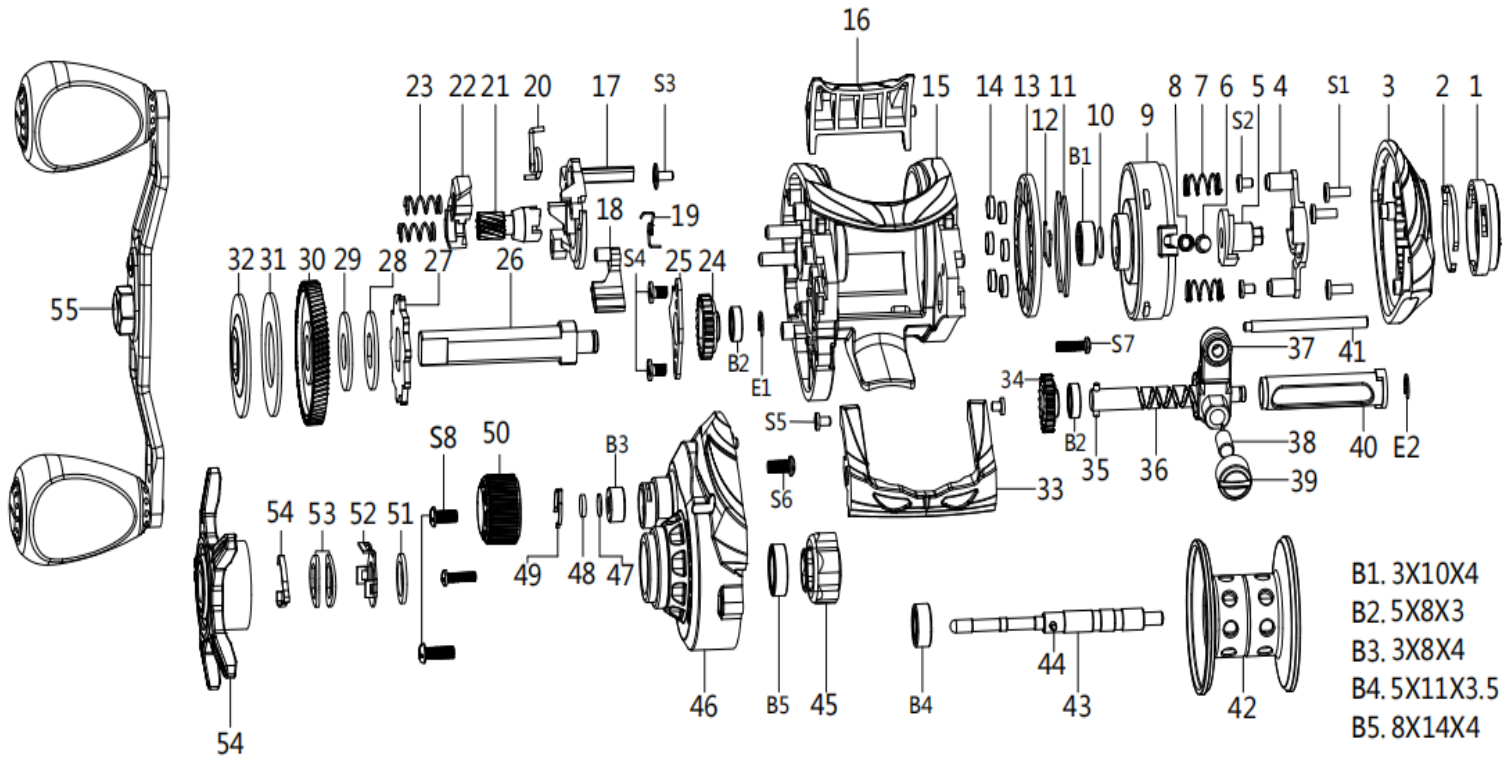

1. Magnetic slow down knob
2. sound gear
3. Side cover
4. Slow down bracket
5. Slow down carousel
6. Side cover positioning post
7. Slow down bracket compression spring
8. Positioning post compression spring
9. Side Cover Holder
10. Spindle gasket
11. Magnet positioning piece
12. Four corner buckle
13. Magnet holder
14. Magnets
15. main body
16. Clutch button
17. Clutch lever
18. Backstop switch piece
19. Backstop switch spring
20. Clutch lever torsion spring
21. Gear rod
22. Clutch
23. Clutch compression spring
24. Transmission gear A
25. Bearing Baffle
26. Gear shaft
27. Reverse gear
28. Small brake pads
29. Small brake pads
30. Chainring
31. Large Brake Pads
32. Large Brake Pads
33. Decorative Front Cover
34. Transmission gear B
35. Guide rod positioning pin
36. Guide rod
37. line Holder
38. Guide jaws
39. line Holder Nut
40. Guide rod sheath

S1. ST2.6X6
S2. PT2.0X5
S3. ST2.6X4
S4. PT2.6X6
S5. PT2.0X4
S6. ST2.6X6.5
S7. ST2.0X8
S8. ST2.6X8

E1. E2.5*6*0.4
E2. E3*6.5*0.5

41. line seat locating pin
42. spool
43. Spindle
44. Spindle positioning pin
45. EWC one-way bearing
46. Main cover
47. Fine adjustment knob SUS gasket
48. Fine adjustment knob rubber gasket
49. Main cover ticks
50. Brake knob
51. Bearing spacer
52. Button Tick Holder
53. Bending spring gasket
54. Button ticks
55. Handle group